Third Angle Projection

Do Not Scale

All Dimensions in mm

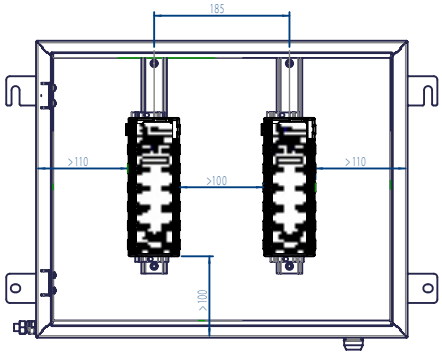

PART VIEW
SHOWING GULLEY IN
FLANGE BEHIND LID.

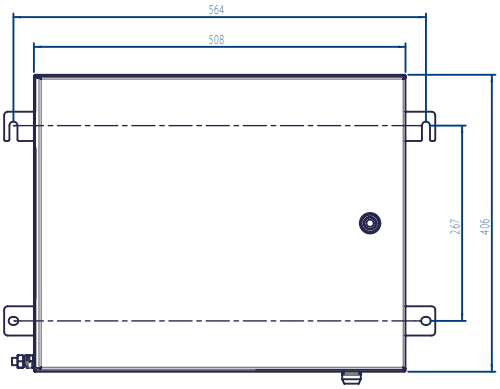

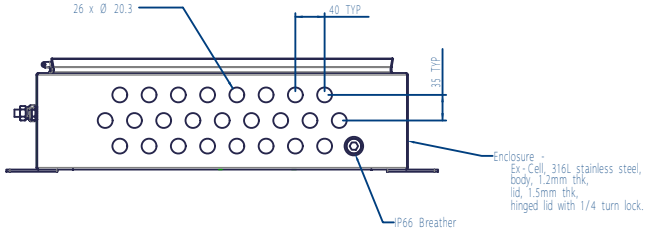

NOTES ;

1. EX-CELL - 405015, 1.2mm THK IP66 STAINLESS STEEL 316L ENCLOSURE, 1.5mm THK LID, WITH LEFT HAND HINGED LID & 3mm THK MOUNTING FLANGES.
2. INTERNAL/EXTERNAL M10 EARTH STUD FITTED, PLUS EARTH STRAP TO LID.
3. 2 x DIN RAIL TO EN50022 35 x 7.5 "T" SECTION, MOUNTED VERTICALLY. DIN RAIL FITTED WITH 2 END STOPS.
4. M20 HOLES DRILLED EQUI-SPACED ON BOTTOM FACE, AS REQUIRED. IP66 Exe CERTIFIED BREATHER PLUG FITTED IN POSITION SHOWN.
5. PRODUCT LABEL AND TAGGING LABEL (WHERE SPECIFIED), FITTED ONTO LID. ENCLOSURE PART No. LABEL FITTED INSIDE OF LID.
6. GULLY FORMED IN CHANNEL SECTION TO ENSURE WATER DOES NOT ENTER ENCLOSURE WHEN DOOR IS OPENED.
7. ENCLOSURE IS SUPPLIED WITH DIN RAIL MOUNTING MEGABLOCK DEVICE COUPLERS AND OTHER FIELDBUS CONNECTIVITY COMPONENTS AS REQUIRED FOR THE APPLICATION (SEE DATA SHEET). 2 x F312 ARE SHOWN TO ILLUSTRATE A TYPICAL APPLICATION BUT NOT SUPPLIED WITH THE PRODUCT.

Date	Modification

EATON Powering Business Worldwide

Eaton Electric Limited,
Great Marlings, Butterfield, Luton, Bedfordshire, England, LU2 8DL
Telephone: +44 (0)1582 723633
Web: www.mtl-inst.com | Email: mtlenquiry@eaton.com

This drawing and any information or descriptive material set out on it are the confidential and copyright property of Eaton Electric Limited and MUST NOT BE DISCLOSED, COPIED, LOANED in whole or part or used for any purpose without the written permission of Eaton Electric Limited.

This component / assembly to be in compliance with RoHS & REACH regulations.

Tolerance (Unless Otherwise Stated):	±	Scale: 1:5	Drawn by: CMB	Sheet: 1 of 1
				Drawn Date: 8.19
Title: PROCESS JUNCTION BOX, SS, 24 SPUR			Drawing Number: CD-FCS-9624	Revision: 1

SolidWorks

A3